The University of the State of New York

REGENTS HIGH SCHOOL EXAMINATION

INTEGRATED ALGEBRA

Friday, June 20, 2014 — 9:15 a.m. to 12:15 p.m., only

Student Name: Steve Watson

School Name: www.jmap.org

The possession or use of any communications device is strictly prohibited when taking this examination. If you have or use any communications device, no matter how briefly, your examination will be invalidated and no score will be calculated for you.

Print your name and the name of your school on the lines above.

A separate answer sheet for Part I has been provided to you. Follow the instructions from the proctor for completing the student information on your answer sheet.

This examination has four parts, with a total of 39 questions. You must answer all questions in this examination. Record your answers to the Part I multiple-choice questions on the separate answer sheet. Write your answers to the questions in Parts II, III, and IV directly in this booklet. All work should be written in pen, except graphs and drawings, which should be done in pencil. Clearly indicate the necessary steps, including appropriate formula substitutions, diagrams, graphs, charts, etc. The formulas that you may need to answer some questions in this examination are found at the end of the examination. This sheet is perforated so you may remove it from this booklet.

Scrap paper is not permitted for any part of this examination, but you may use the blank spaces in this booklet as scrap paper. A perforated sheet of scrap graph paper is provided at the end of this booklet for any question for which graphing may be helpful but is not required. You may remove this sheet from this booklet. Any work done on this sheet of scrap graph paper will *not* be scored.

When you have completed the examination, you must sign the statement printed at the end of the answer sheet, indicating that you had no unlawful knowledge of the questions or answers prior to the examination and that you have neither given nor received assistance in answering any of the questions during the examination. Your answer sheet cannot be accepted if you fail to sign this declaration.

Notice…

A graphing calculator and a straightedge (ruler) must be available for you to use while taking this examination.

DO NOT OPEN THIS EXAMINATION BOOKLET UNTIL THE SIGNAL IS GIVEN.

Part I

Answer all 30 questions in this part. Each correct answer will receive 2 credits. No partial credit will be allowed. For each question, write on the separate answer sheet the numeral preceding the word or expression that best completes the statement or answers the question. [60]

Use this space for computations.

1 The product of $6x^3y^3$ and $2x^2y$ is

(1) $3xy^2$
(2) $8x^5y^4$
(3) $12x^5y^4$
(4) $12x^6y^3$

$6 \mid x^3 \mid y^3$
$2 \mid x^2 \mid y$
$12 \mid x^{(3+2)} \mid y^{(3+1)}$
$12 \mid x^5 \mid y^4$
$\boxed{12x^5y^4}$

not quantitative (numerical)

2 Which set of data is qualitative?

(1) laps swum in a race ← numbers
(2) number of swimmers on the team ← numbers
(3) swimmers' favorite swimsuit colors ← not numbers
(4) temperature in Fahrenheit of the water in a pool ← numbers

3 It takes a snail 500 hours to travel 15 miles. At this rate, how many hours will it take the snail to travel 6 miles?

(1) 0.18
(2) 5.56
(3) 150
(4) 200

$\frac{\text{miles}}{\text{hours}}$

$\frac{15 \text{ miles}}{500 \text{ hours}} = \frac{6 \text{ miles}}{x \text{ hours}}$

$\frac{15}{500} = \frac{6}{x}$

cross multiply

$15x = 500(6)$
$15x = 3000$
$x = \frac{3000}{15}$
$x = \boxed{200}$

Use this space for computations.

4 The equation $y = ax^2 + bx + c$ is graphed on the set of axes below.

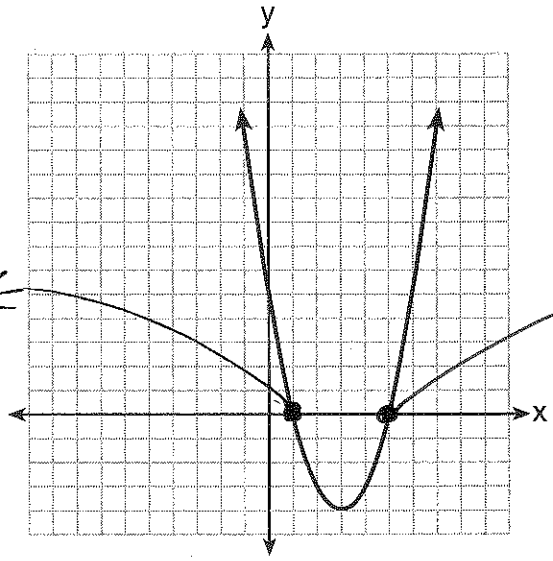

(1,0)
root is x value

(5,0)
root is x value

Based on the graph, what are the roots of the equation $ax^2 + bx + c = 0$?

(1) 0 and 5
(2) 1 and 0
(3) 1 and 5
(4) 3 and −4

5 When solving for the value of x in the equation $4(x - 1) + 3 = 18$, Aaron wrote the following lines on the board.

[line 1]	$4(x - 1) + 3 = 18$
[line 2]	$4(x - 1) = 15$
[line 3]	$4x - 1 = 15$
[line 4]	$4x = 16$
[line 5]	$x = 4$

wrong

$4(x-1) = 15$
$4x - 4 = 15$
Correct

Which property was used *incorrectly* when going from line 2 to line 3?

(1) distributive
(2) commutative
(3) associative
(4) multiplicative inverse

Aaron forgot to distribute the multiplication over the second term.

Use this space for computations.

6 What is the solution of $4x - 30 \geq -3x + 12$?

(1) $x \geq 6$ (3) $x \geq -6$

(2) $x \leq 6$ (4) $x \leq -6$

$4x - 30 \geq -3x + 12$

$+3x \quad +3x$

$7x - 30 \geq +12$

$+30 \quad +30$

$7x \geq 42$

$7x \geq 42$

$x \geq \frac{42}{7}$

$x \geq 6$

7 A local government is planning to increase the fee for use of a campsite. If a survey were taken, which group would be most biased in their *opposition* to the increase?

(1) teachers (3) postal workers

(2) soccer players (4) campers

against

Campers would not want the cost of camping to increase

8 An example of an algebraic equation is

(1) $r^2 + 1$ (3) $5x = 7$

(2) $2a + (n - 1)d$ (4) $-25\pi + 100$

An equation must have an equal sign in it.

9 What is the value of x in the solution of the system of equations $3x + 2y = 12$ and $5x - 2y = 4$?

(1) 8 (3) 3

(2) 2 (4) 4

$3x + 2y = 12$

$5x - 2y = 4$

$8x + 0y = 16$

$8x = 16$

$\boxed{x = 2}$

10 What is the slope of a line that passes through the points $(-2, -7)$ and $(-6, -2)$?

(x_1, y_1)

(x_2, y_2)

(1) $-\frac{4}{5}$ (3) $\frac{8}{9}$

(2) $-\frac{5}{4}$ (4) $\frac{9}{8}$

See formula page

$m = \frac{y_2 - y_1}{x_2 - x_1} = \frac{-2 - (-7)}{-6 - (-2)} = \frac{-2 + 7}{-6 + 2} = \frac{5}{-4} = \boxed{\frac{-5}{4}}$

Use this space for computations.

11 Which notation is equivalent to the inequality $-3 < x \leq 7$?

(1) $[-3,7]$ (3) $[-3,7)$

● $(-3,7]$ (4) $(-3,7)$

$-3 < x \leq 7$

non-inclusive inclusive

$(-3, 7]$

( ) "Round" parentheses are non-inclusive.

[ ] "Square" parentheses are inclusive

12 What is the value of the expression $3a^2 - 4|a| + 6$ when $a = -3$?

(1) -24 ● 21

(2) -9 (4) 45

$3a^2 - 4|a| + 6$

$3(-3)^2 - 4|-3| + 6$

$3(9) - 4(3) + 6$

$27 - 12 + 6$

$15 + 6$

$\boxed{21}$

A function has one and only one value of y for each value of x.

13 Which relation is a function?

● $\{(2,1), (3,1), (4,1), (5,1)\}$ Each x has only one y

(2) $\{(1,2), (1,3), (1,4), (1,5)\}$ 1 has many y values

(3) $\{(2,3), (3,2), (4,2), (2,4)\}$ 2 has more than one y value

(4) $\{(1,6), (2,8), (3,9), (3,12)\}$ 3 has more than one y value

This goes on top.

14 When $6x^2 - 4x + 3$ is subtracted from $3x^2 - 2x + 3$ the result is

(1) $3x^2 - 2x$ (3) $3x^2 - 6x + 6$

● $-3x^2 + 2x$ (4) $-3x^2 - 6x + 6$

$3x^2 - 2x + 3$

subtract $(6x^2 - 4x + 3)$

HINT: Change the signs and add.

$3x^2 - 2x + 3$

add $-6x^2 + 4x - 3$

$\boxed{-3x^2 + 2x + 0}$

15 The lengths of the sides of a right triangle can be

● 9, 12, 15 (3) 5, 5, 10

(2) 8, 10, 13 (4) 4, 5, 6

Pythagorean Theorem

$a^2 + b^2 = c^2$

$a^2 + b^2 = c^2$

$9^2 + 12^2 = 15^2$

$81 + 144 = 225$

$225 = 225$ ✓

16 Which equation represents a line that is parallel to the y-axis?

● $x = 5$ (3) $y = 5$

(2) $x = 5y$ (4) $y = 5x$

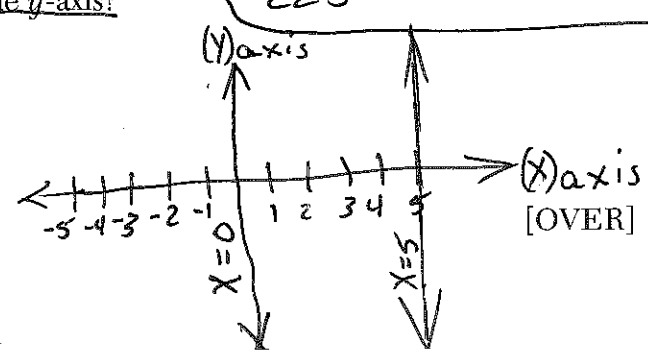

Use this space for computations.

17 In right triangle ABC shown below, $AC = 12$, $BC = 16$, and $AB = 20$.

See formula sheet

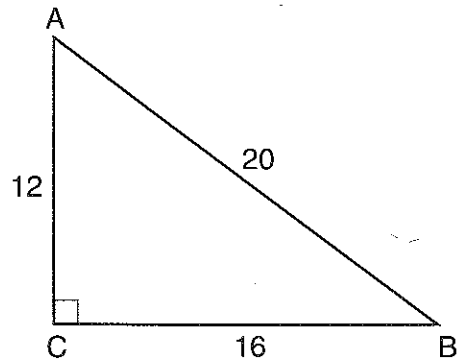

$\sin = \frac{opp}{hyp}$ $\sin B = \frac{12}{20}$ ✓

$\cos = \frac{adj}{hyp}$ $\cos A = \frac{12}{20}$ ✓

$\tan = \frac{opp}{adj}$ $\tan A = \frac{16}{12}$ ✓

Which equation is *not* correct?

(1) $\cos A = \frac{12}{20}$ ✓ (3) $\sin B = \frac{12}{20}$ ✓

(2) $\tan A = \frac{16}{12}$ ✓ (4) $\tan B = \frac{16}{20}$

$\tan B = \frac{12}{16}$

Incorrect Correct

3 multiply (x + 4) → equal sign 5 multiply

18 Three times the sum of a number and four is equal to five times the number, decreased by two. If x represents the number, which equation is a correct translation of the statement?

x subtract 2

(1) $3(x + 4) = 5x - 2$ (3) $3x + 4 = 5x - 2$

(2) $3(x + 4) = 5(x - 2)$ (4) $3x + 4 = 5(x - 2)$

$3(x+4) = 5x - 2$

19 What is the equation of the line that passes through the point $(3, -7)$ and has a slope of $-\frac{4}{3}$?

(x, y) m

(1) $y = -\frac{4}{3}x + 3$ (3) $y = \frac{37}{3}x - \frac{4}{3}$

(4) $y = -\frac{59}{9}x - \frac{4}{3}$

	Solve for b	Write the equation using m + b
$y = -7$	$y = mx + b$	$y = mx + b$
$m = \frac{-4}{3}$	$-7 = \frac{-4}{3}(3) + b$	$\boxed{y = \frac{-4}{3}x - 3}$
$x = 3$	$-7 = \frac{-4}{3}\left(\frac{3}{1}\right) + b$	
$b = ?$	$-7 = \frac{-12}{3} + b$	
	$-7 = -4 + b$	
	$+4 \quad +4$	
	$-3 = b$	

Use this space for computations.

20 Which parabola has an axis of symmetry of $x = 1$?

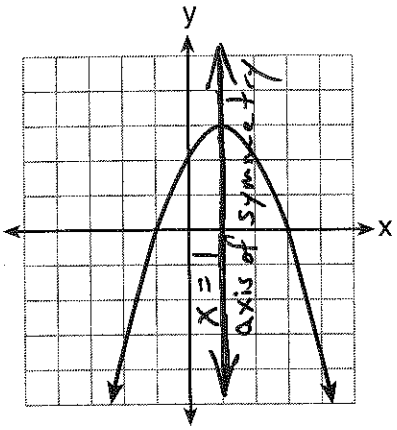

(1)

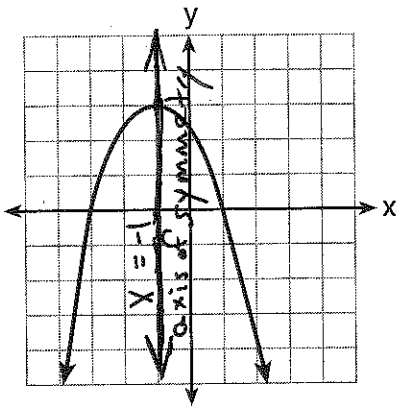

(3)

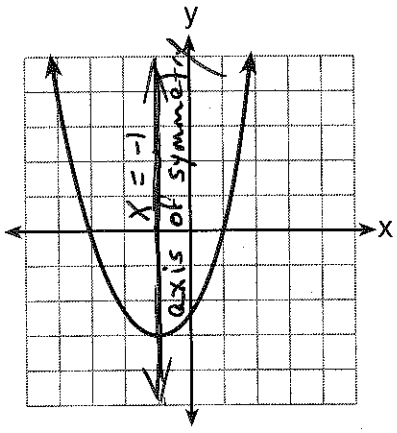

(2)

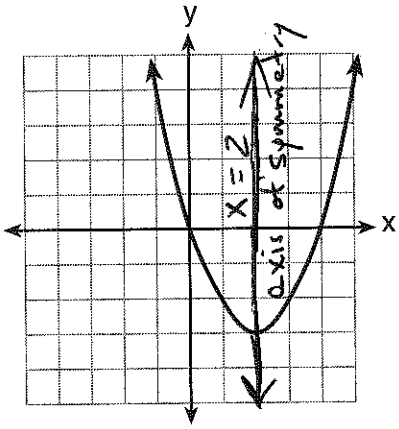

(4)

$3x^2 - 9x + 6$

$3(x^2 - 3x + 2)$

this trinomial can be factored into the form $(x \_)(x \_)$

The two terms must add to -3 and multiply to $+2$.

$\boxed{3(x-2)(x-1)}$

$-2 + (-1) = -3$

$(-2)(-1) = +2$

21 When factored completely, the expression $3x^2 - 9x + 6$ is equivalent to

(1) $(3x - 3)(x - 2)$

(2) $(3x + 3)(x - 2)$

(3) $3(x + 1)(x - 2)$

(4) $3(x - 1)(x - 2)$

Put this equation in the y-editor of graphing calculator

22 The equation $P = 0.0089t^2 + 1.1149t + 78.4491$ models the United States population, P, in millions since 1900. If t represents the number of years after 1900, then what is the estimated population in 2025 to the *nearest tenth of a million*?

(1) 217.8

(2) 219.0

(3) 343.9

(4) 356.9

2025
−1900
125 years

$t = 125$

Look in the table of values for $x = 125$.

X	Y_1
125	356.87

hundredth tenth

$\boxed{356.9}$ nearest tenth

Use this space for computations.

23 Which graph represents an absolute value equation?

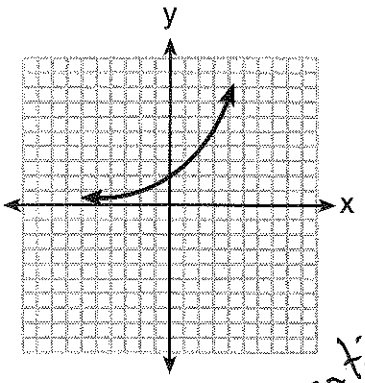

(1) Exponential

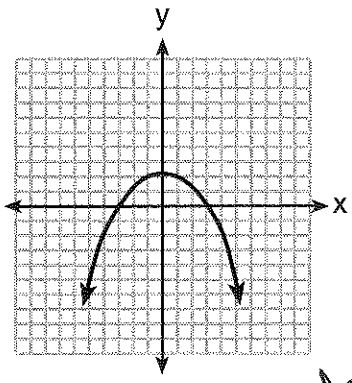

(3) Quadratic

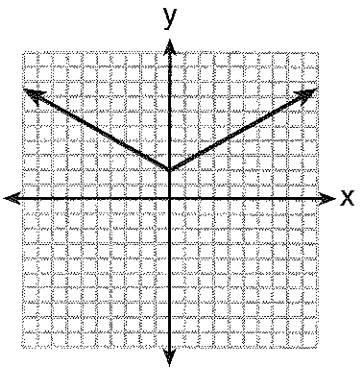

(2) Absolute Value

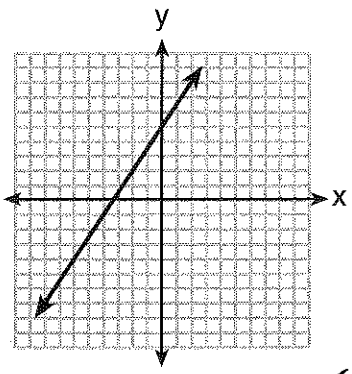

(4) Linear

24 The expression $\frac{a}{b} - \frac{1}{3}$ is equivalent to

(1) $\frac{a-1}{b-3}$

(2) $\frac{a-1}{3b}$

(3) $\frac{3a-b}{3b}$

(4) $\frac{3a-b}{b-3}$

$\frac{a}{b} \quad \frac{1}{3}$

$\frac{a(3) - b(1)}{b(3)}$

$\boxed{\frac{3a-b}{3b}}$

or

$\frac{a}{b} - \frac{1}{3}$

$\left(\frac{3}{3}\right)\left(\frac{a}{b}\right) - \left(\frac{1}{3}\right)\left(\frac{b}{b}\right)$

$\frac{3a}{3b} - \frac{b}{3b}$

$\boxed{\frac{3a-b}{3b}}$

25 Which value of x is the solution of the equation $2(x - 4) + 7 = 3$?

(1) 1

(2) 2

(3) 6

(4) 0

$2(x-4)+7=3$

$2x-8+7=3$

$2x-1=3$

$+1 \quad +1$

$2x=4$

$x=\boxed{2}$

Use this space for computations.

26 Given:

M = {green, red, yellow, black}
N = {blue, green, yellow}

∪ means union (join together)

Which set represents $M \cup N$?

(1) {yellow}
(2) {green, yellow}
(3) {blue, red, black}
(4) {green, red, yellow, blue, black}

All members of each set must be represented in the union of sets.

27 Which situation describes a correlation that is *not* a causal relationship?

(1) the number of miles walked and the total Calories burned → walking causes calories to be burned.
(2) the population of a country and the census taken every ten years
(3) the number of hours a TV is on and the amount of electricity used → watching TV causes electricity to be used.
(4) the speed of a car and the number of hours it takes to travel a given distance → the speed of a car causes more or less hours to be used to travel a given distance.

→ The population of a country does not cause the census to be taken every ten years.

28 A school offers three classes of math and two classes of science, all of which meet at different times. What is the total number of ways a student can take a math class and a science class?

(1) 5
(2) 6
(3) 8
(4) 9

Math Choices × Science Choices = 6

$\boxed{3} \times \boxed{2} = 6$

29 The expression $\frac{x-7}{9-x^2}$ is undefined when x is

(1) −3 and 7
(2) 3 and −3
(3) 3, only
(4) 9

This expression is undefined when the denominator equals zero.

$9 - x^2 = 0$
$9 = x^2$
$\boxed{\pm 3 = x}$

30 What is the product of (1.5×10^2) and (8.4×10^3) expressed in scientific notation?

(1) 1.26×10^5
(2) 12.6×10^5
(3) 1.26×10^6
(4) 12.6×10^6

8.4×10^3
1.5×10^2
$(1.5 \times 8.4) \times 10^{(3+2)}$
not scientific notation → 12.6×10^5
scientific notation → $\boxed{1.26 \times 10^6}$

Part II

Answer all 3 questions in this part. Each correct answer will receive 2 credits. Clearly indicate the necessary steps, including appropriate formula substitutions, diagrams, graphs, charts, etc. For all questions in this part, a correct numerical answer with no work shown will receive only 1 credit. All answers should be written in pen, except for graphs and drawings, which should be done in pencil. [6]

31 A patio consisting of two semicircles and a square is shown in the diagram below. The length of each side of the square region is represented by $2x$. Write an expression for the area of the entire patio, in terms of x and π.

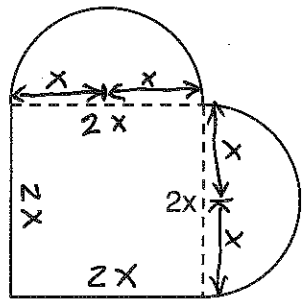

Area of Circle $= \pi r^2$

Area semicircle $= \frac{\pi r^2}{2}$

Area of Square $= s^2$

The area of each semicircle is $\frac{\pi x^2}{2}$

The area of the square is $4x^2$

There are two semicircles and one square

$$2\left(\frac{\pi x^2}{2}\right) + 4x^2$$

$$\boxed{\pi x^2 + 4x^2}$$

32 Clayton is performing some probability experiments consisting of flipping three fair coins. What is the probability that when Clayton flips the three coins, he gets two tails and one head?

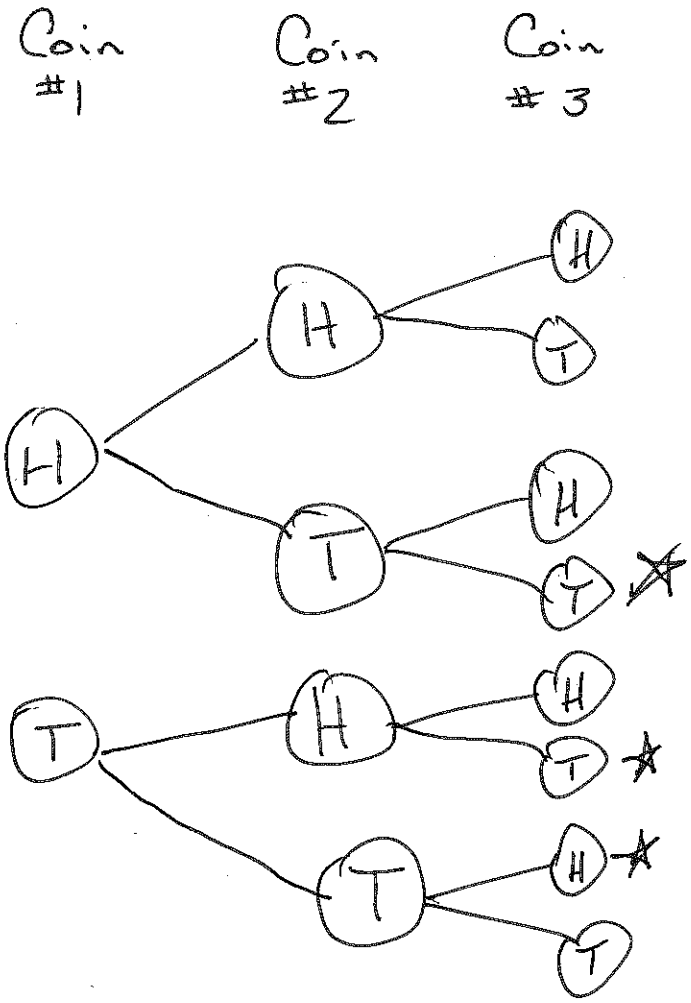

Tree Diagram

H	H	H
H	H	T
H	T	H
H	T	T
T	H	H
T	H	T
T	T	H
T	T	T

Sample Space

There are 8 possible outcomes
Three outcomes have two tails and one head

$\boxed{\frac{3}{8}}$ Answer

perimeter

33 Ross is installing edging around his pool, which consists of a rectangle and a semicircle, as shown in the diagram below.

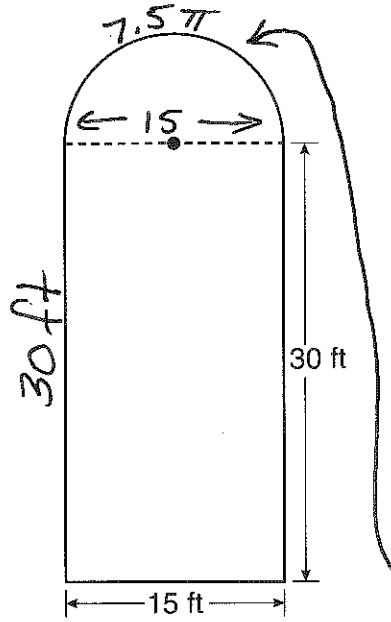

The distance around a circle is its circumference.

$C = \pi d$

The distance around a semicircle is

$\frac{\pi d}{2}$

$d = 15$ $\quad \frac{\pi(15)}{2}$

7.5π

Determine the length of edging, to the *nearest tenth of a foot*, that Ross will need to go completely around the pool.

Add all the outside distances together

$$\begin{array}{r} 30 \\ +\ 15 \\ +\ 30 \\ +\ 7.5\pi \\ \hline 75 + 7.5\pi \end{array}$$

$75 + 23.5619449$

98.5619449

tenths hundredths thousandths

$\boxed{98.6}$

Part III

Answer all 3 questions in this part. Each correct answer will receive 3 credits. Clearly indicate the necessary steps, including appropriate formula substitutions, diagrams, graphs, charts, etc. For all questions in this part, a correct numerical answer with no work shown will receive only 1 credit. All answers should be written in pen, except for graphs and drawings, which should be done in pencil. [9]

34 Solve the following system of equations algebraically for all values of x and y.

$$y = x^2 + 2x - 8$$
$$y = 2x + 1$$

$x^2 + 2x - 8 = y$

$y = 2x + 1$

$$x^2 + \cancel{2x} - 8 = \cancel{2x} + 1$$
$$\cancel{-2x} \qquad \cancel{-2x}$$

$$x^2 - 8 = 1$$
$$+8 \qquad +8$$

$$x^2 = 9$$

$$x = \pm 3$$

$x = (+3)$

$y = 2x + 1$

$y = 2(3) + 1$

$y = 6 + 1$

$y = 7$

$\boxed{(3, 7)}$

$x = (-3)$

$y = 2x + 1$

$y = 2(-3) + 1$

$y = -6 + 1$

$y = -5$

$\boxed{-3, -5}$

Check using graphing calculator ✓

35 A storage container in the form of a rectangular prism is measured to be 12 inches by 8 inches by 4 inches. Its actual measurements are 11.75 inches by 7.75 inches by 4 inches. Find the relative error in calculating the volume of the container, to the *nearest thousandth*.

Volume = l w h

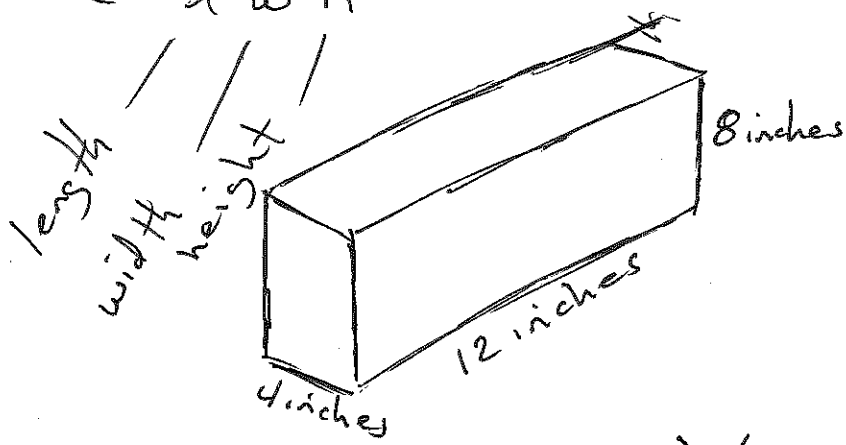

Actual Volume = (11.75)(7.75)(4) = 364.25

Measured Volume = (12)(8)(4) = 384

$$\text{Relative Error} = \left|\frac{\text{Difference Between Actual + Measured}}{\text{Actual}}\right|$$

$$RE = \frac{|364.25 - 384|}{364.25}$$

$$RE = \frac{19.75}{364.25}$$

$$RE = .054|2210021$$

tenths hundredths thousandths

Answer

$\boxed{0.054}$

36 Perform the indicated operations and express the answer in simplest radical form.

$$3\sqrt{7}\left(\sqrt{14}+4\sqrt{56}\right)$$

$$\left(3\sqrt{7}\right)\left(\sqrt{14}\right)+\left(3\sqrt{7}\right)\left(4\sqrt{56}\right)$$

$$3\sqrt{7\cdot 14}+12\sqrt{7\cdot 56}$$

$$3\sqrt{98}+12\sqrt{392}$$

$$3\sqrt{2}\sqrt{49}+12\sqrt{2}\sqrt{196}$$

$$3\sqrt{2}\,7+12\sqrt{2}\,14$$

$$21\sqrt{2}+168\sqrt{2}$$

$$\boxed{189\sqrt{2}}$$

Check

$$3\sqrt{7}\left(\sqrt{14}+4\sqrt{56}\right)=267.2863633$$

$$189\sqrt{2}=267.2863633$$

Use graphing calculator to check

Part IV

Answer all 3 questions in this part. Each correct answer will receive 4 credits. Clearly indicate the necessary steps, including appropriate formula substitutions, diagrams, graphs, charts, etc. For all questions in this part, a correct numerical answer with no work shown will receive only 1 credit. All answers should be written in pen, except for graphs and drawings, which should be done in pencil. [12]

Let #apples be X Let #oranges be Y

37 During its first week of business, a market sold a total of 108 apples and oranges. The second week, five times the number of apples and three times the number of oranges were sold. A total of 452 apples and oranges were sold during the second week. Determine how many apples and how many oranges were sold the *first* week. [Only an algebraic solution can receive full credit.]

apples oranges total

First Week: $x + y = 108$

Second Week $5x + 3y = 452$

$x + y = 108$

$y = -x + 108$

$5x + 3y = 452$

$5x + 3(-x + 108) = 452$

$5x - 3x + 324 = 452$

$2x + \cancel{324} = 452$

$\cancel{-324} \quad -324$

$2x = 128$

$\boxed{x = 64}$

$x + y = 108$

$\cancel{64} + y = 108$

$\cancel{-64} \quad -64$

$\boxed{y = 44}$

Answer

64 apples and 44 oranges were sold the first week.

Check 2nd Equation

$5(64) + 3(44) = 452$

$320 + 132 = 452$

$452 = 452$ ✓

38 On the set of axes below, solve the following system of inequalities graphically. Label the solution set S.

$$2x + 3y < -3$$
$$y - 4x \geq 2$$

$3y < -2x - 3$

$y < \frac{-2x}{3} - \frac{3}{3}$

$y < \frac{-2}{3}x - 1$

slope y-intercept

$y \geq 4x + 2$

slope y-intercept

Shade above a solid line.

shade below the dotted line

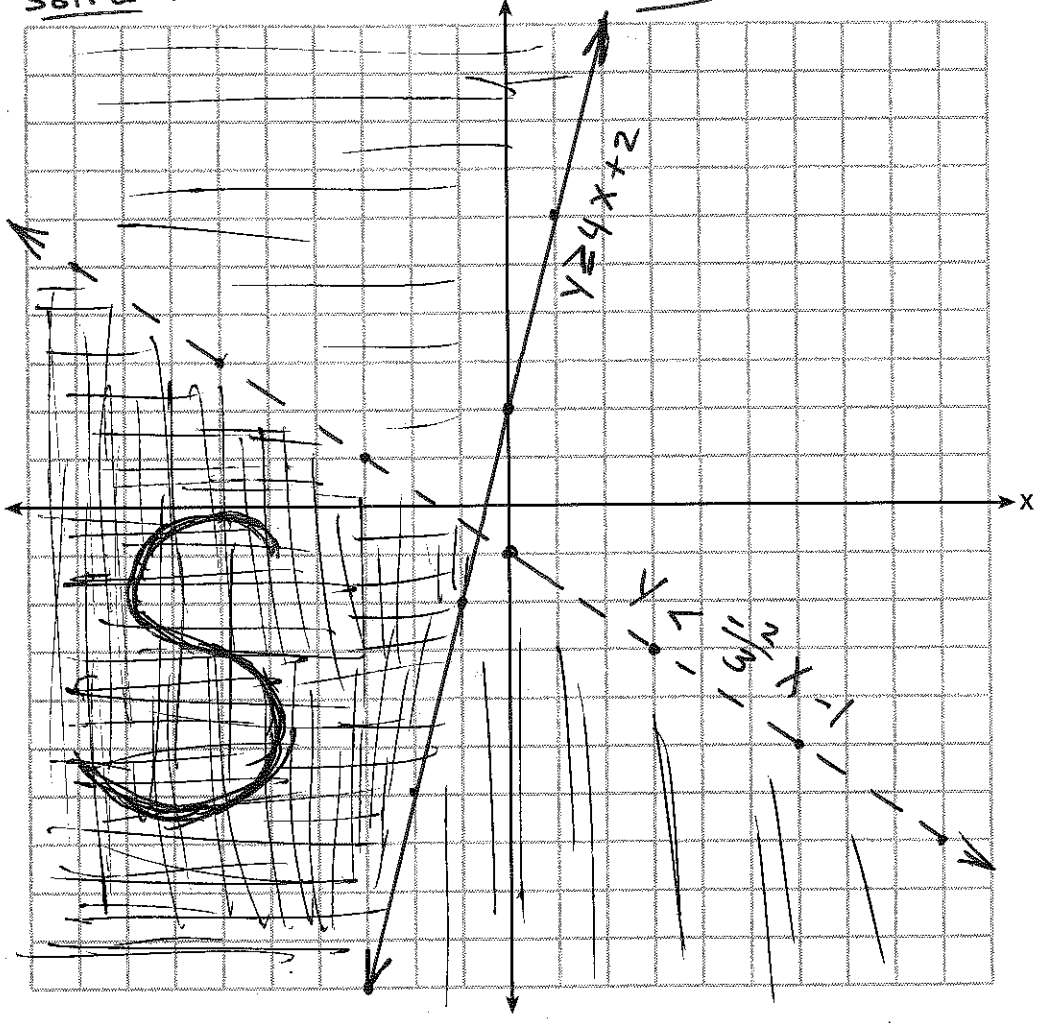

39 During the last 15 years of his baseball career, Andrew hit the following number of home runs each season.

$n = 15$

~~35~~, ~~24~~, ~~32~~, ~~36~~, ~~40~~, ~~32~~, ~~40~~, ~~33~~, ~~36~~, ~~33~~, ~~11~~, ~~20~~, ~~10~~, ~~22~~, ~~8~~

State and label the values of the minimum, 1st quartile, median, 3rd quartile, and maximum.

minimum, Q_1, Median Q_2, Q_3, Maximum

$\boxed{8}$, 11, 19, $\boxed{20}$, 22, 24, $\boxed{32}$, 32, 33, 35, 36, $\boxed{36}$, 38, 40, $\boxed{40}$

Using the line below, construct a box-and-whisker plot for this set of data.